CGD - Cargo Drawers Boxes – Steel & Aluminum Single Both End Doors

Cargo drawer boxes are super heavy duty, high capacity and offer easy access from side of truck or trailer. Boxes can be mounted on back of your truck or on your flatbed or trailer. These boxes are perfect for storing tools, hardware, fasteners and many other small parts. Cargo boxes are available in different sizes, and can be ordered custom size. All AMERICAN TRUCKBOXES boxes are designed and built to keep your equipment safe and secure.

Description

- An engineered steel and/or aluminum construction
- Fully seam welded on all seams and corners
- Stainless steel continuous hinge on full length of door
- Fully concealed rain gutter with automotive weather seal
- Lockable SS Dolphin Tail HD adjustable T-handle latch
- Zinc epoxy primer with MR powder baked topcoat finish
- Gas springs to support top hinged doors in open position
- Galvanized 18g hemmed adjustable dividers
- HD drawers with inside adjustable compartments
- Boxes are available in custom size
- Mounting kit not included

CGD Boxes – Angled Box Mates with DU41 Boxes

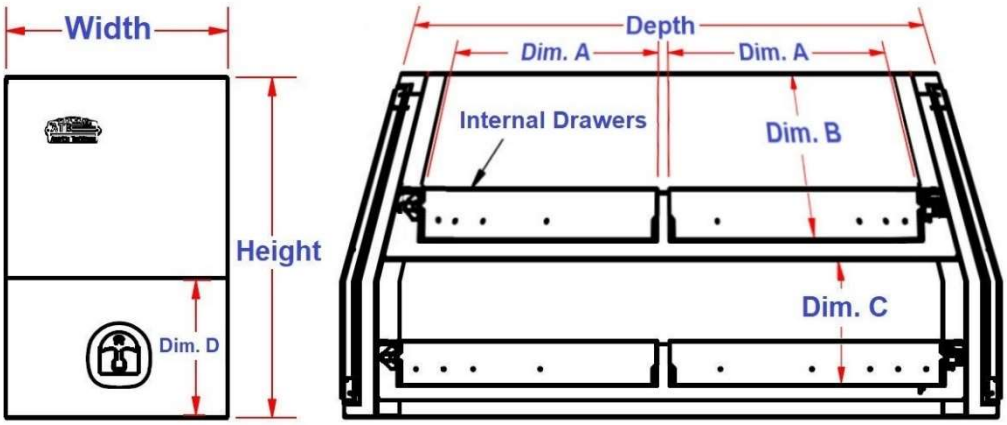

Note: Powder Coated Color Finish - Add or Coded at end of part number: BX = Black and WX = White (WX)

No.	Model Number	Material	Drawers	Height (in.)	Depth (in.)	Width (in.)	Dim. E (in.)	Dim. G (in.)	Dim. H (in.)	Weight (lb.)
1.	A-CGD57-218224ST-T14	.125 S/.100 TP	Yes/4	21	82	24	34	8	8	190
2.	A-CGD57-219624ST-T14	.125 S/.100 TP	Yes/4	21	96	24	42	8	8	210
3.	A-CGD57-288224ST-T16	.125 S/.100 TP	Yes/4	28	82	24	34	12	11	300
4.	A-CGD57-289624ST-T16	.125 S/.100 TP	Yes/4	28	96	24	42	12	11	368
5.	S-CGD47-218224ST-BX14	14g Steel	Yes/4	21	82	24	34	8	8	340
6.	S-CGD47-219624ST-BX14	14g Steel	Yes/4	21	96	24	42	8	8	375
7.	S-CGD47-288224ST-BX16	14g Steel	Yes/4	28	82	24	34	12	11	480
8.	S-CGD47-289624ST-BX16	14g Steel	Yes/4	28	96	24	42	12	11	590

Note: Boxes are available in different configuration and custom sizes; call the factory for different sizes and options.

 ©2026 American Truckboxes, LLC.